U.are.U® 4500 Reader

USB Fingerprint Reader

Target Applications

- Desktop PC security
- Mobile PCs
- Custom applications

Features

- Blue LED
- Small form factor
- Excellent image quality
- Superior ESD resistance
- Encrypted fingerprint data
- Latent print rejection
- Counterfeit finger rejection
- Rotation invariant
- Rugged
- Works well with dry, moist or rough fingerprints
- Compatible with Windows® 7, Vista, XP Professional, 2000 and Windows Server 2000, 2003, 2008

Key Specifications

- Pixel resolution: 512 dpi (average x, y over the scan area)
- Scan capture area: 14.6 mm (nom. width at center) 18.1 mm (nom. length)
- 8-bit grayscale (256 levels of gray)
- Reader size (approximate): 65 mm x 36 mm x 15.56 mm
- Compatible with USB 1.0, 1.1 and 2.0 (Full Speed) specifications
- Indoor, home and office use



Product Description

The U.are.U 4500 Reader is an elegant, powerful fingerprint identity machine. With an executive-class look and feel, the U.are.U 4500 Reader is perfect for power users and shared environments. Its design is sleek and compact to conserve valuable desk space but it stays right where you put it because of its nice heft and special undercoating.

The U.are.U 4500 radiates an attractive blue glow that provides an unobtrusive presence in low light environments and also ensures that it does not compete with alarm colors in settings such as healthcare.

To use, you simply place your finger on the glowing window, and the reader quickly and automatically scans your fingerprint. For superior user feedback, a red "flash" indicates that a fingerprint image has been captured. On-board electronics calibrate the reader and encrypt the scanned data before sending it over the USB interface.

DigitalPersona readers utilize optical fingerprint scanning technology to achieve excellent image quality, a large capture area and superior reliability. The U.are.U 4500 Reader and DigitalPersona® Fingerprint Recognition Engine have an unmatched ability to authenticate even the most difficult fingerprints accurately and rapidly regardless of placement angle.

The U.are.U 4500 Reader can be purchased for use with DigitalPersona Pro Workstation, DigitalPersona Pro Kiosk, DigitalPersona Online or any of the DigitalPersona SDK packages. Whether you are an enterprise customer, a system integrator or a home user, DigitalPersona's fingerprint authentication solutions provide a natural extension to your security system and applications.

Part Number	Packaging
88003-001	Single unit
88003-B01	2 or more units - packaged bulk

Mechanical Specifications

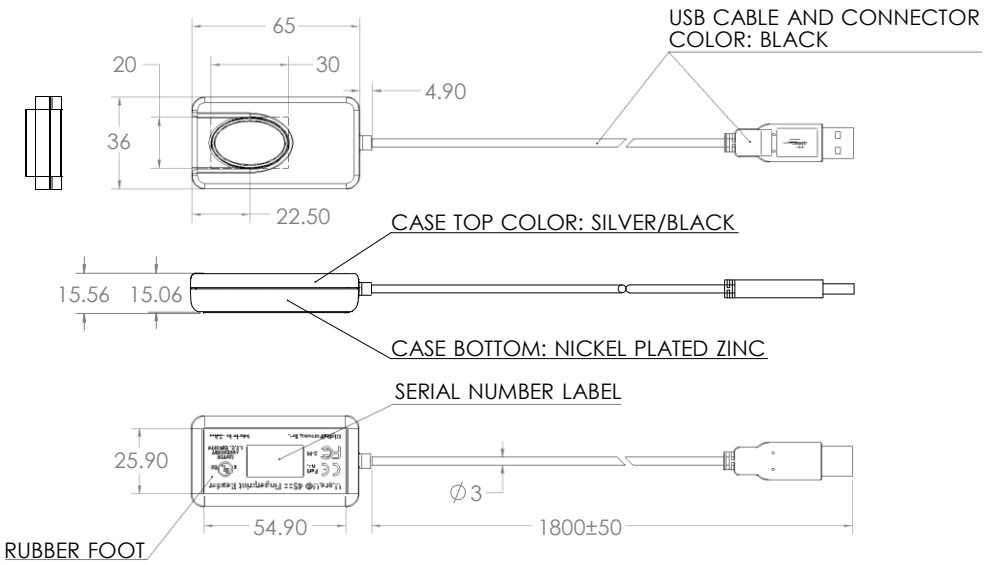

ALL DIMENSIONS ARE IN MILLIMETERS

Ratings

Supply Voltage	5.0V ±5% supplied by USB
Supply Current—scanning	< 100 mA (Typical)
Supply Current—idle mode	120 mA (Typical)
Supply Current—suspend mode	< 0.5 mA (Maximum)
ESD Susceptibility	>15 kV, mounted in case
Temperature, Operating	0 - 40 C
Humidity, Operating	20% - 80% non-condensing
Temperature, Storage	-10 - 60 C
Humidity, Storage	20% - 90% non-condensing
Scan Data	8-bit grayscale
Standards Compliance	FCC Class B, CE, ICES, BSMI, MIC, USB, WHQL
Weight	105 grams
Interface	USB 2.0 Full-speed High Power Device

Data subject to change without notice.

SISQUAL
Rua de Carlos Dubini, 169 – 4150-188 Porto
Tel: +351 229397790 • Fax: +351 229397799 • E-Mail: sisqual@sisqual.com